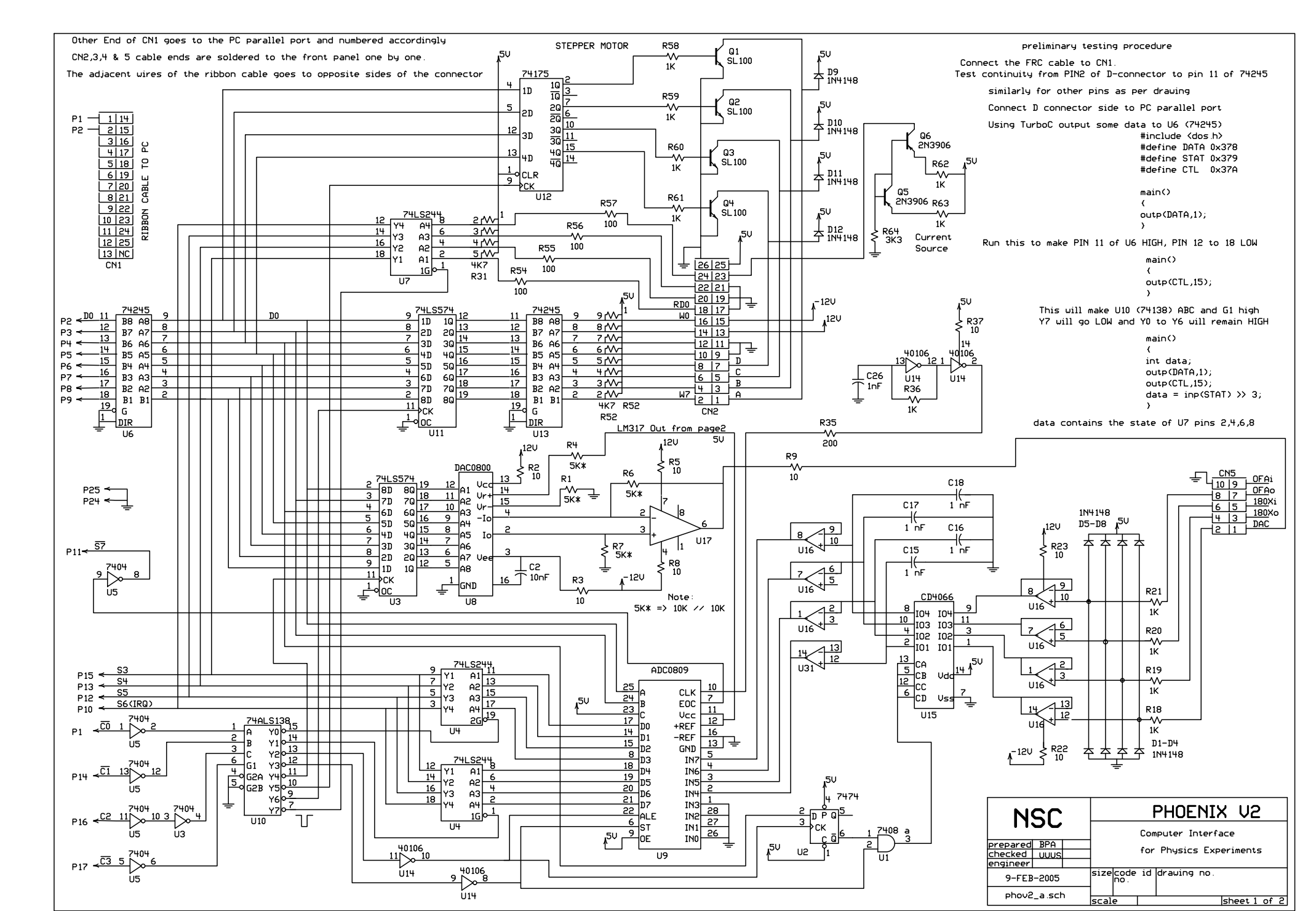
Other End of CN1 goes to the PC parallel port and numbered accordingly
CN2,3,4 & 5 cable ends are soldered to the front panel one by one.
The adjacent wires of the ribbon cable goes to opposite sides of the connector
STEPPER MOTOR
preliminary testing procedure
Connect the FRC cable to CN1.
Test continuity from PIN2 of D-connector to pin 11 of 74245
similarly for other pins as per drawing
Connect D connector side to PC parallel port
Using TurboC output some data to U6 (74245)
#include <dos.h>
#define DATA 0x378
#define STAT 0x379
#define CTL 0x37A
main()
{
outp(DATA,1);
}
Run this to make PIN 11 of U6 HIGH, PIN 12 to 18 LOW
main()
{
outp(CTL,15);
}
This will make U10 (74138) ABC and G1 high
Y7 will go LOW and Y0 to Y6 will remain HIGH
main()
{
int data;
outp(DATA,1);
outp(CTL,15);
data = inp(STAT) >> 3;
}
data contains the state of U7 pins 2,4,6,8
RIBBON CABLE TO PC
CN1
74175
U12
74LS244
U7
74245
U6
74LS574
U11
U13
CN2
Q1 SL100
Q2 SL100
Q3 SL100
Q4 SL100
Q5 2N3906
Q6 2N3906
Current Source
LM317 Out from page2
DAC0800
U8
U3
U17
Note:
5K* => 10K // 10K
ADC0809
U9
74LS138
U10
U4
CD4066
U15
U16
U31
CN5
OFAi
OFAo
180Xi
180Xo
DAC
1N4148
D5-D8
D1-D4
1N4148
7474
U2
7408
U1
NSC
PHOENIX V2
Computer Interface
for Physics Experiments
prepared BPA
checked UUUS
engineer
9-FEB-2005
phov2_a.sch
size
code id no.
drawing no.
scale
sheet 1 of 2