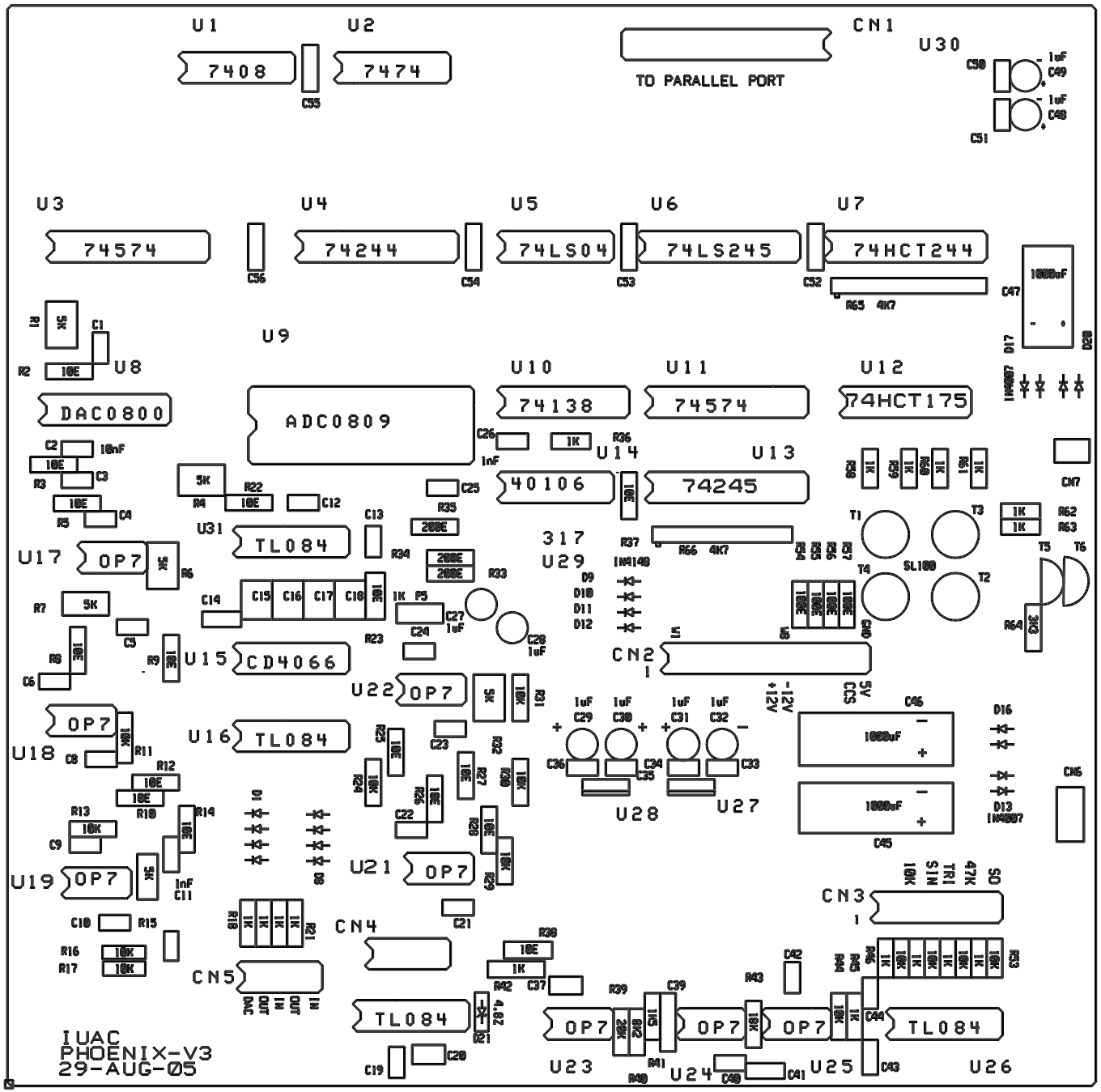
U1
7408
U2
7474
C55
TO PARALLEL PORT
CN1
U30
C50
1uF
C49
C51
1uF
C48
U3
74574
C56
U4
74244
C54
U5
74LS04
C53
U6
74LS245
C52
U7
74HCT244
R65 4K7
C47
1000uF
D17
D20
IN4007
R1
5K
C1
R2
10E
U8
DAC0800
U9
ADC0809
U10
74138
U11
74574
U12
74HCT175
C26
1nF
1K
R36
U14
40106
U13
74245
C2
10nF
R3
C3
R4
R22
C12
C25
R35
C13
U31
TL084
R34
200E
R33
317
U29
R37
IN4148
R66 4K7
R58
R59
R60
R61
CN7
T1
T3
T4
T2
SL100
R62
R63
T5
T6
R64
3K3
U17
OP7
R6
R7
5K
C14
C15
C16
C17
C18
1K
P5
C27
1uF
C24
C28
1uF
D9
D10
D11
D12
R23
C5
R8
R9
C6
U15
CD4066
CN2
U22
OP7
R31
10K
5V
CCS
-12V
+12V
C29
C30
C31
C32
C46
1000uF
D16
D13
IN4007
CN6
U18
OP7
R11
C8
U16
TL084
R25
C23
R32
R24
R26
R27
R30
C36
C34
C35
C33
U28
U27
R12
R10
R13
R14
C9
C22
R28
R29
U19
OP7
C11
1nF
D1
D8
U21
OP7
C21
CN3
10K
SIN
TRI
47K
SO
C10
R15
R16
R17
R18
R21
CN4
CN5
DAC
OUT
IN
OUT
IN
R38
R42
C37
R39
C39
R43
C42
R44
R45
R46
R53
TL084
D21
4.8Z
OP7
OP7
OP7
TL084
C19
C20
U23
R41
R40
U24
C40
C41
U25
C43
U26
IUAC
PHOENIX-V3
29-AUG-05